www.tamel.pl

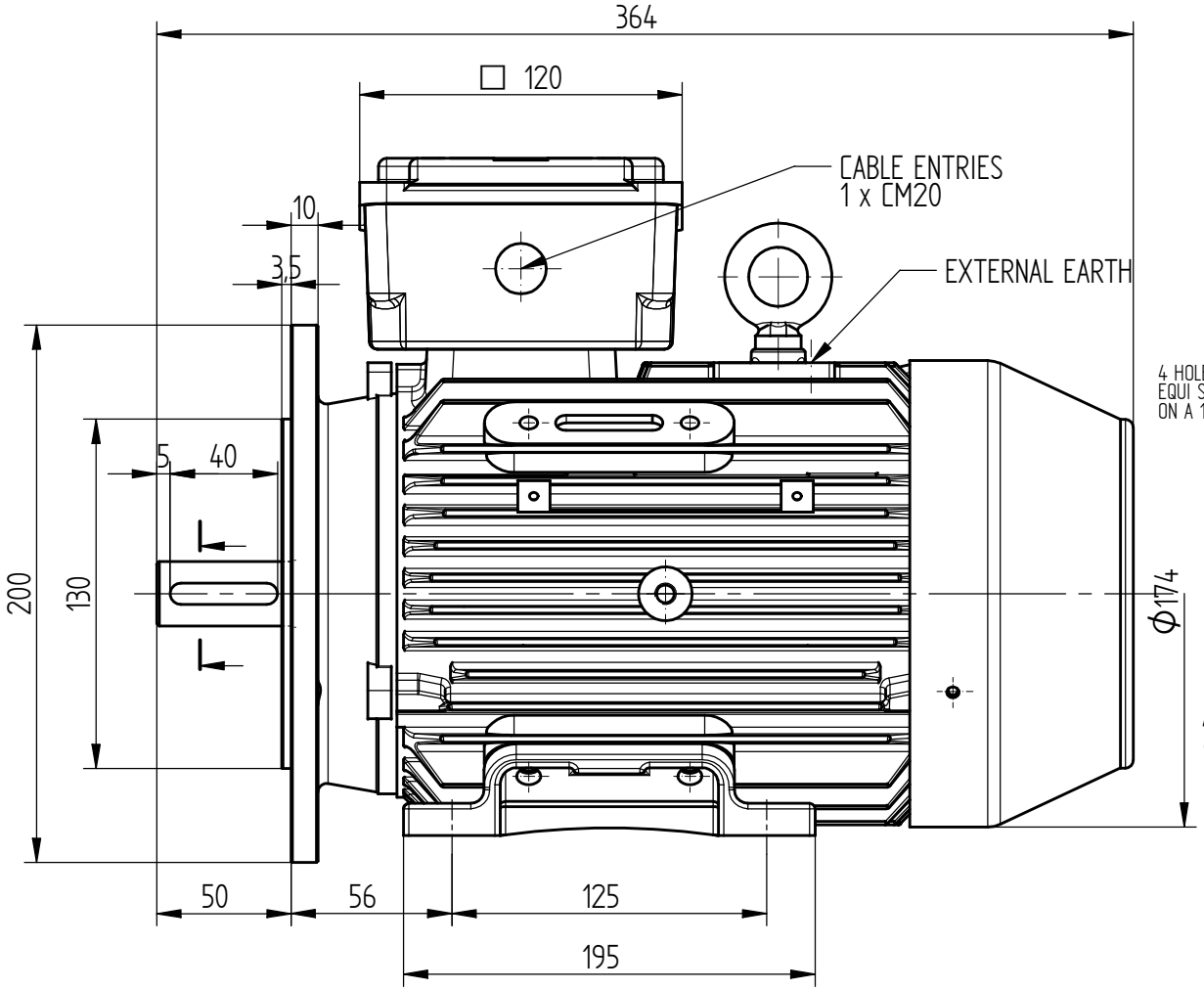

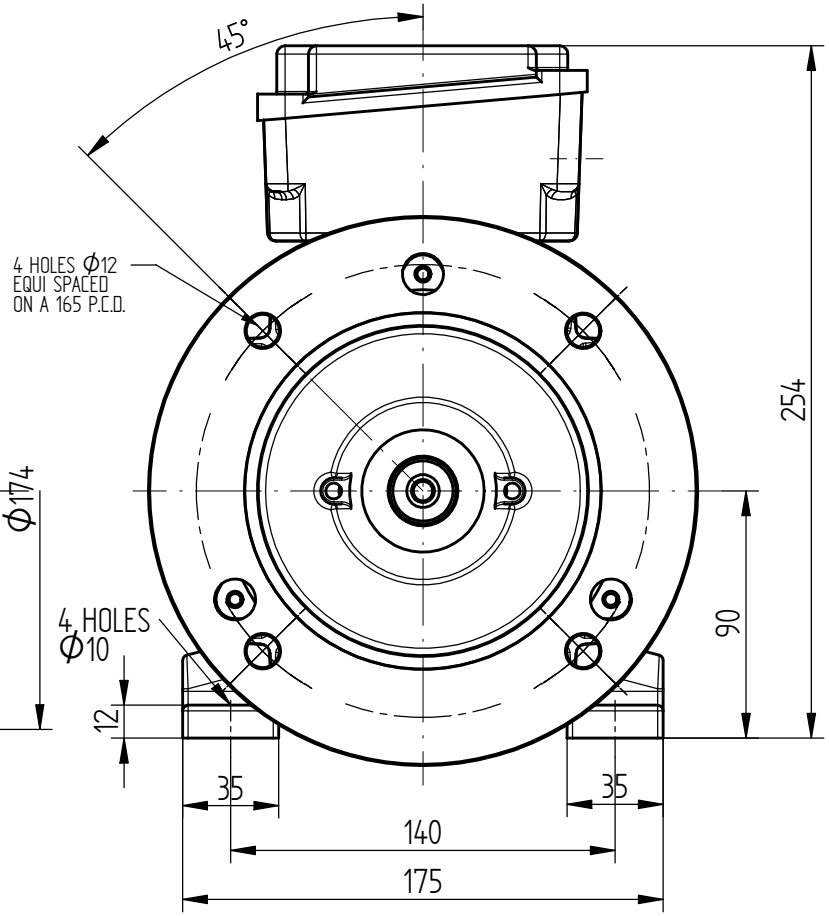

HOLE TAPPED M8 x 19 DEEP
TO DIN 332 FORM D

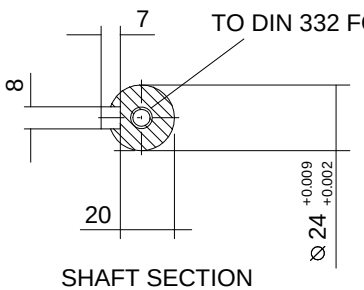

SHAFT SECTION

CONDUIT ENTRIES - TERMINAL BOX CAN BE ROTATED AT 90° INTERVALS
(CONDUIT ENTRY POSITION SHOWN FOR ILLUSTRATION ONLY).

ALL DIMENSIONS IN MILLIMETERS

FIRST ANGLE PROJECTION

BROOK CROMPTON

Produced by Tamel S.r.l. a company of ATB

SHEET SIZE	TITLE:		NAME	DATE	DRG. No. W22GH0035T
A3	OUTLINE DIMENSION DRAWING W CAST IRON TOTALLY ENCLOSED FAN COOLED 90LX FRAME D FLANGE AND FOOT MOUNTED MOTOR	DRAWN	JM	08-02-11	DRG. REF.
		CHECKED			REVISION: DATE:
		SCALE	1 : 2		